UNDERDRIVE CLUTCH

COMPONENTS

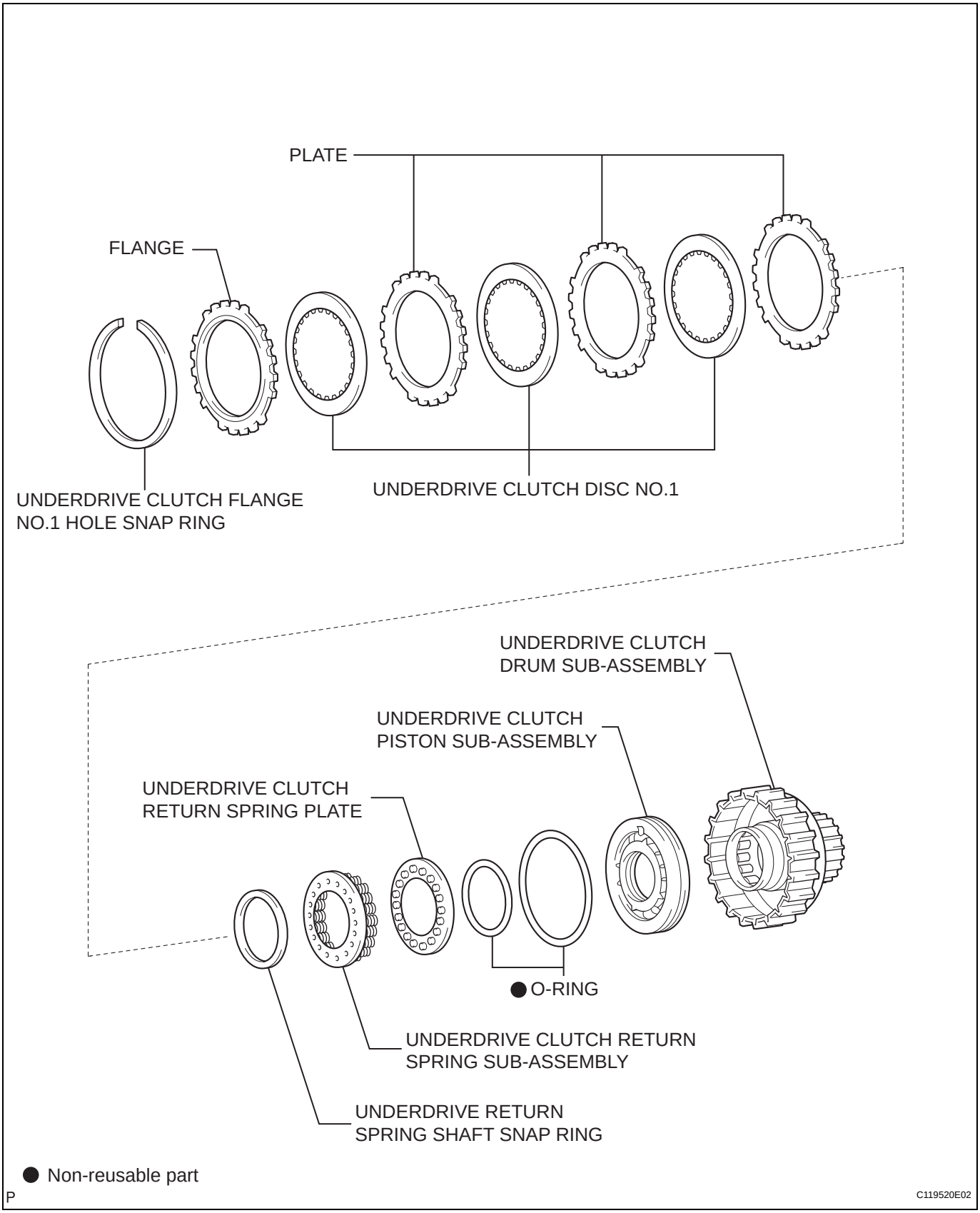

AX

cardiagn.com

DISASSEMBLY

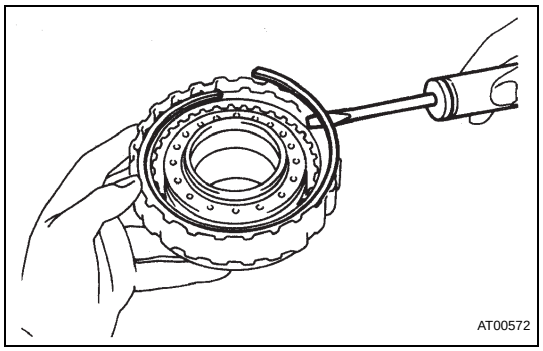

1. REMOVE UNDERDRIVE CLUTCH FLANGE NO.1 HOLE SNAP RING

(a) Using a screwdriver, remove the underdrive clutch flange No.1 hole snap ring from the underdrive clutch drum sub-assembly.

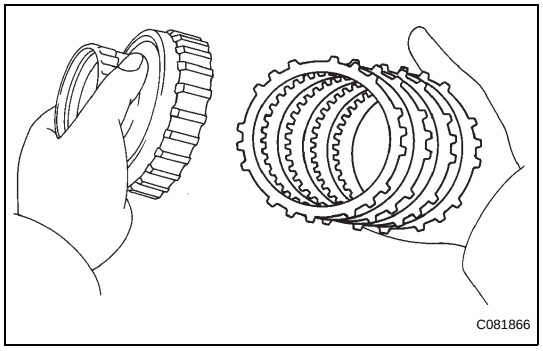

2. REMOVE UNDERDRIVE CLUTCH DISC NO.1

(a) Remove the flange, 3 underdrive clutch disc No.1s and 3 plates from the underdrive clutch drum sub-assembly.

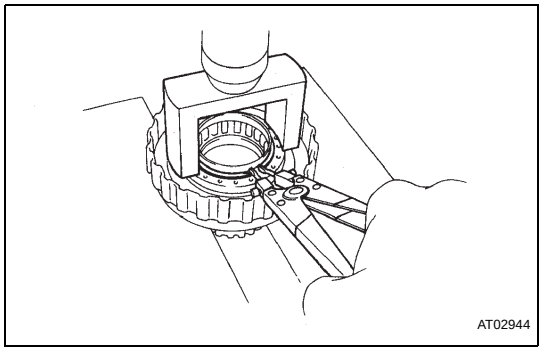

3. REMOVE UNDERDRIVE RETURN SPRING SHAFT SNAP RING

(a) Using SST and a press, compress the return spring retainer.
SST 09350-32014 (09351-32070)

(b) Using snap ring pliers, remove the underdrive return spring shaft snap ring.

(c) Remove the SST.

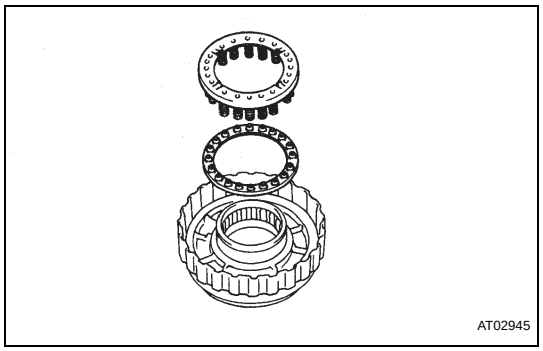

4. REMOVE UNDERDRIVE CLUTCH RETURN SPRING SUB-ASSEMBLY

(a) Remove the underdrive clutch return spring sub-assembly and underdrive clutch return spring plate from the underdrive clutch drum sub-assembly.

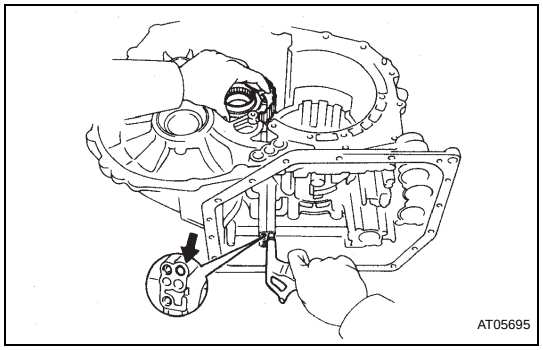

5. REMOVE UNDERDRIVE CLUTCH PISTON SUB-ASSEMBLY

(a) Install the underdrive clutch to the transaxle case.
HINT:
Before installing the clutch, install the oil seal rings to the transaxle case.

(b) Apply compressed air into the oil passage of the case, and remove the underdrive clutch piston sub-assembly from the underdrive clutch drum sub-assembly.

cardiagn.com